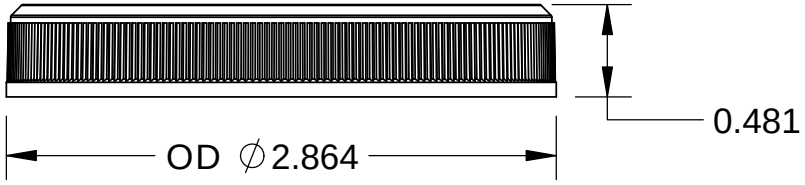

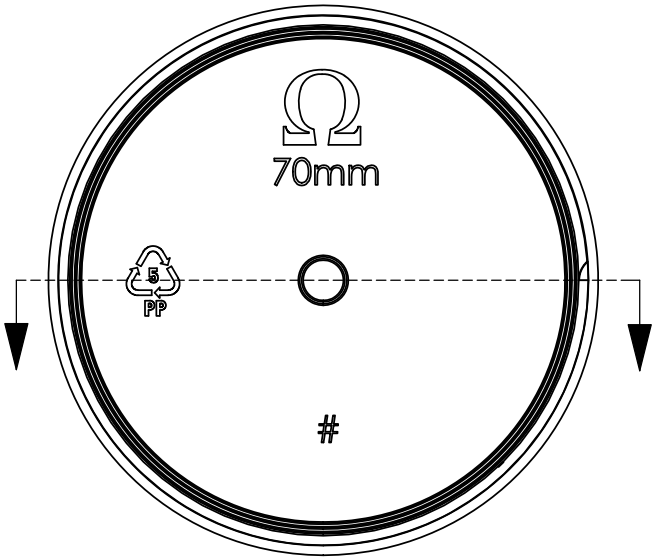

Notes:
1. Material: Polypropylene (PP)
2. Weight: Approx 7 grams
3. Thread: 6 TPI
4. Omega Part # 5300

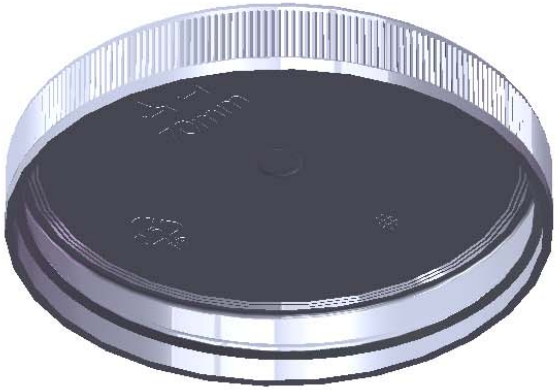

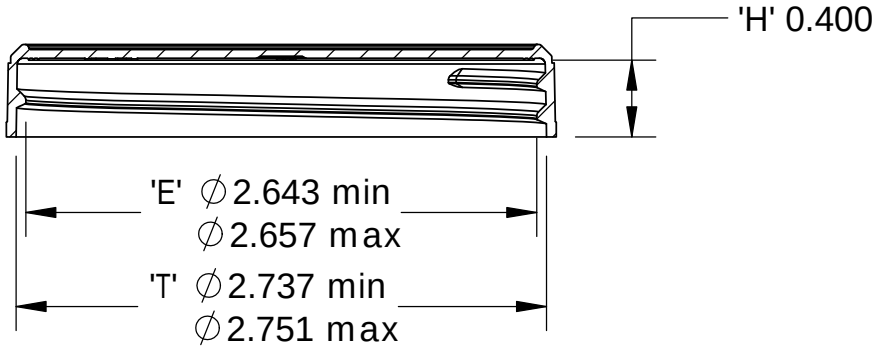

DIMENSION	TOLERANCE
.00	.015
.000	.010

PROPRIETARY AND CONFIDENTIAL

THE INFORMATION CONTAINED IN THIS DRAWING IS THE SOLE PROPERTY OF OMEGA PKG. ANY REPRODUCTION IN PART OR AS A WHOLE WITHOUT THE WRITTEN PERMISSION OF OMEGA PACKAGING IS PROHIBITED.

omega PACKAGING
15210 Desman Rd.
La Mirada, CA 90638
(714) 670-6400
omegapkg.com

REVISION	DATE

70mm Ribbed Cap

LAST	DATE	DWG. NO.	SCALE
IR	5/09/2013	5300-70-Rib	1:1